Robotics and Its Application AI352

Unit 1: Introduction

Topics Cover: What is Robot?, History Evolution of Robotics, Types of Robots, Component of Robots, Application of Robots, Economical Analysis

By Dr. Aaishwarya Bajaj

Teaching Assistant DoAI, SVNIT,Surat

Introduction to Robots and Robotics

A Few Questions

- What do we mean by robot?
- What is robotics?
- Why do we study robotics?
- What are possible applications of robots?
- Can a human being be replaced by a robot?

and so on.

Definitions

- The term: **robot** has come from the Czech word: **robota**, which means forced or slave laborer
- In 1921, **Karel Capek**, a Czech playwright, used the term: robot first in his drama named **Rossum's Universal Robots** (R.U.R)
- According to **Karel Capek**, a robot is a machine look-wise similar to a human being

- Robot has been defined in various ways:

1. According to **Oxford English Dictionary**
   A machine capable of carrying out a complex series of actions automatically, especially one programmable by a computer
2. According to **International Organization for Standardization (ISO):** An automatically controlled, reprogrammable, multipurpose manipulator programmable in three or more axes, which can be either fixed in place or mobile for use in industrial automation applications
3. According to **Robot Institute of America (RIA)**
   It is a reprogrammable multi-functional manipulator designed to move materials, parts, tools or specialized devices through variable programmed motions for the performance of a variety of tasks

Note: A CNC machine is not a robot

- **Robotics**

  It is a science which deals with the issues related to design, manufacturing, usages of robots
- In 1942, the term: **robotics** was introduced by **Isaac Asimov** in his story named **Runaround**
- In robotics, we use the fundamentals of Physics, Mathematics, Mechanical Engg., Electronics Engg., Electrical Engg., Computer Sciences, and others

3 Hs in Robotics

3 Hs of human beings are copied into Robotics, such as

- Hand
- Head
- Heart

Motivation

To cope with increasing demands of a dynamic and competitive market, modern manufacturing methods should satisfy the following requirements:

- Reduced production cost
- Increased productivity
- Improved product quality

Notes: (1) **Automation** can help to fulfill the above requirements
(2) **Automation**: Either Hard or flexible automation
(3) Robotics is an example of flexible automation

A Brief History of Robotics

Year	Events and Development
1954	First patent on manipulator by **George Devol**, the father of robot
1956	**Joseph Engelberger** started the first robotics company: **Unimation**
1962	**General Motors** used the manipulator: **Unimate** in die-casting application
1967	**General Electrical Corporation** made a 4-legged vehicle
1969	1. **SAM** was built by the NASA, USA 2. **Shakey**, an intelligent mobile robot, was built by Stanford Research Institute (SRI)
1970	1. **Victor Scheinman** demonstrated a manipulator known as Stanford Arm 2. **Lunokhod I** was built and sent to the moon by USSR 3. **ODEX 1** was built by **Odetics**

Year	Events and Development
1973	**Richard Hohn** of Cincinnati Mialcron Corporation manufactured **T^3 (The Tomorrow Tool)** robot
1975	**Raibart** at CMU, USA, built a one-legged hopping machine, the first dynamically stable machine
1978	**Unimation** developed **PUMA** (Programmable Universal Machine for Assembly)
1983	**Odetics** introduced a unique experimental six-legged device
1986	**ASV (Adaptive Suspension Vehicle)** was developed at Ohio State University, USA
1997	**Pathfinder** and **Sojourner** was sent to the Mars by the NASA, USA
2000	**Asimo humanoid robot** was developed by **Honda**
2004	The surface of the **Mars** was explored by **Spirit** and **Opportunity**

A Robotic System

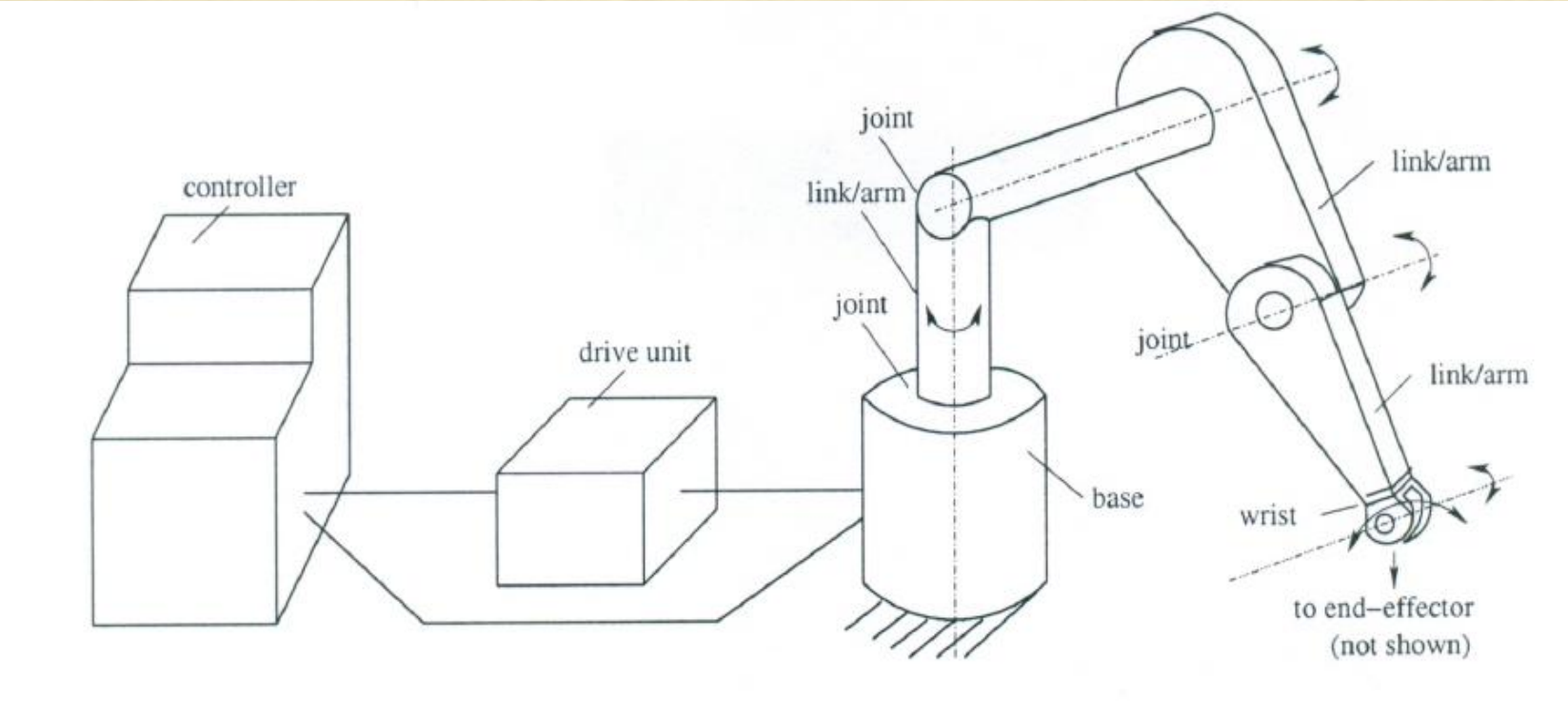

Various Components

1.Base,
2.Links and Joints,
3.End-effector / gripper,
4.Wrist,
5. Drive / Actuator
6. Controller
7. Sensors

Interdisciplinary Areas in Robotics

Mechanical Engineering

- **Kinematics:** Motion of robot arm without considering the forces and /or moments
- **Dynamics:** Study of the forces and/or moments
- **Sensing:** Collecting information of the environment

Computer Science

- **Motion Planning:** Planning the course of action
- **Artificial Intelligence:** To design and develop suitable brain for the robots

Electrical and Electronics Engg.

- **Control schemes** and **hardware** implementations

General Sciences

- **Physics**
- **Mathematics**

Connectivity / Degrees of Freedom of a Joint

It indicates the number of rigid (bodies) that can be connected to a fixed rigid body through the said joint

Joints with One dof

Revolute Joint (R)

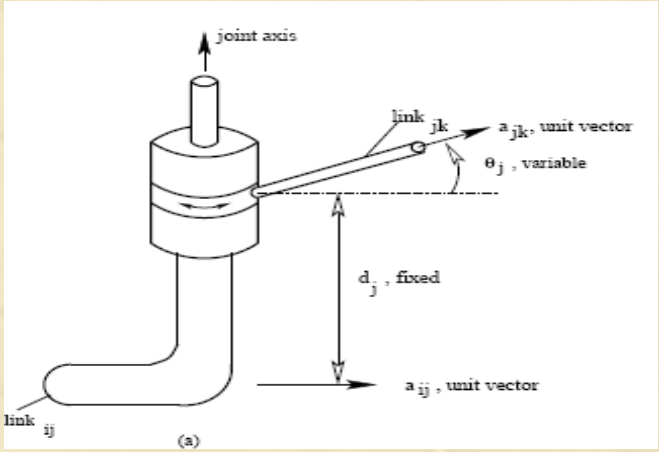

Prismatic Joint (P)

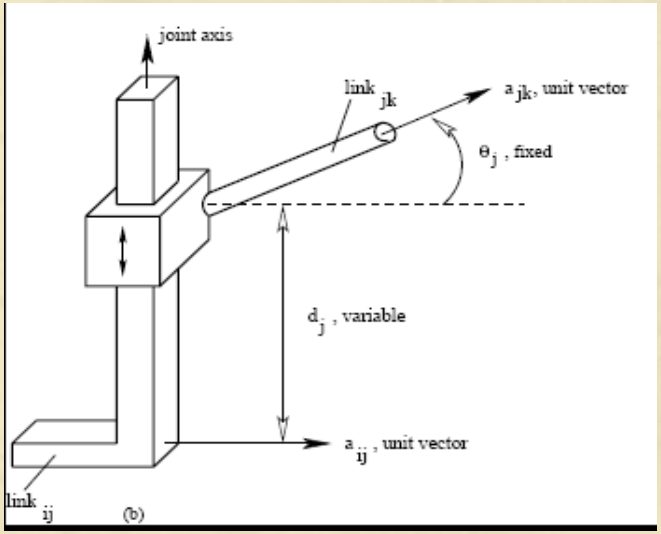

Joints with Two dof

Cylindrical Joint (C)

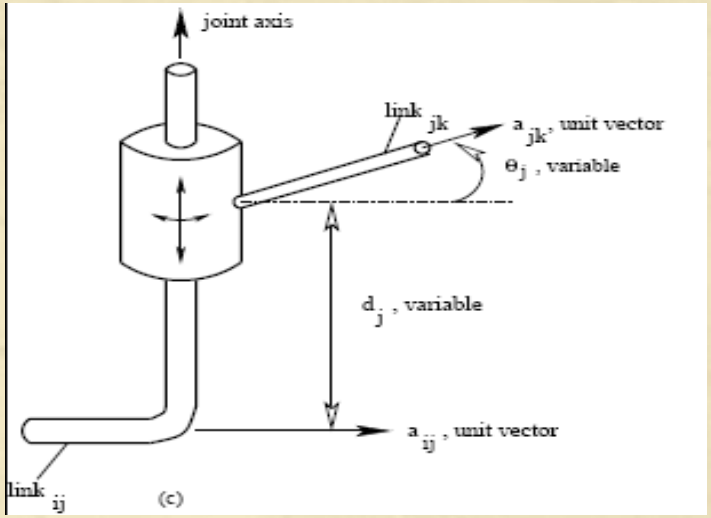

Hooke Joint or Universal Joint (U)

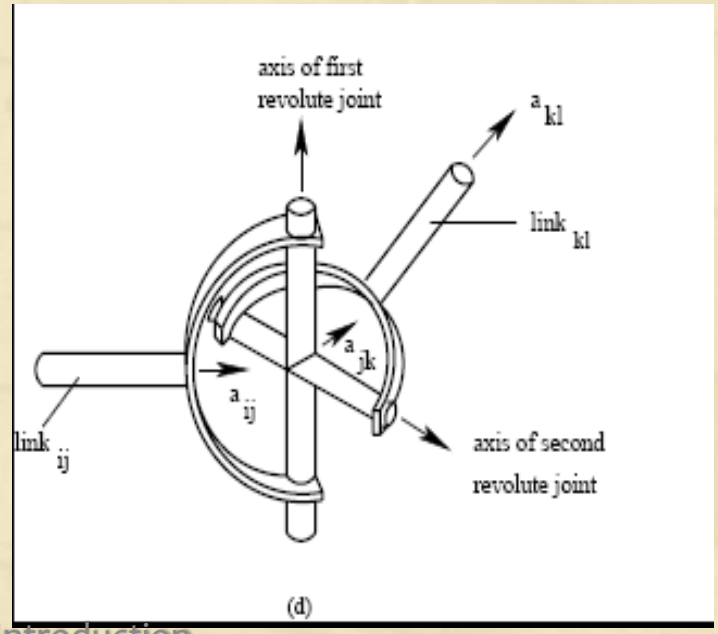

Joints with Three dof

Ball and Socket Joint / Spherical Joint (S|)

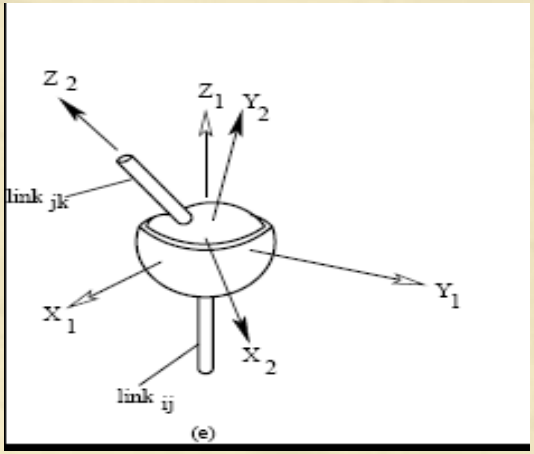

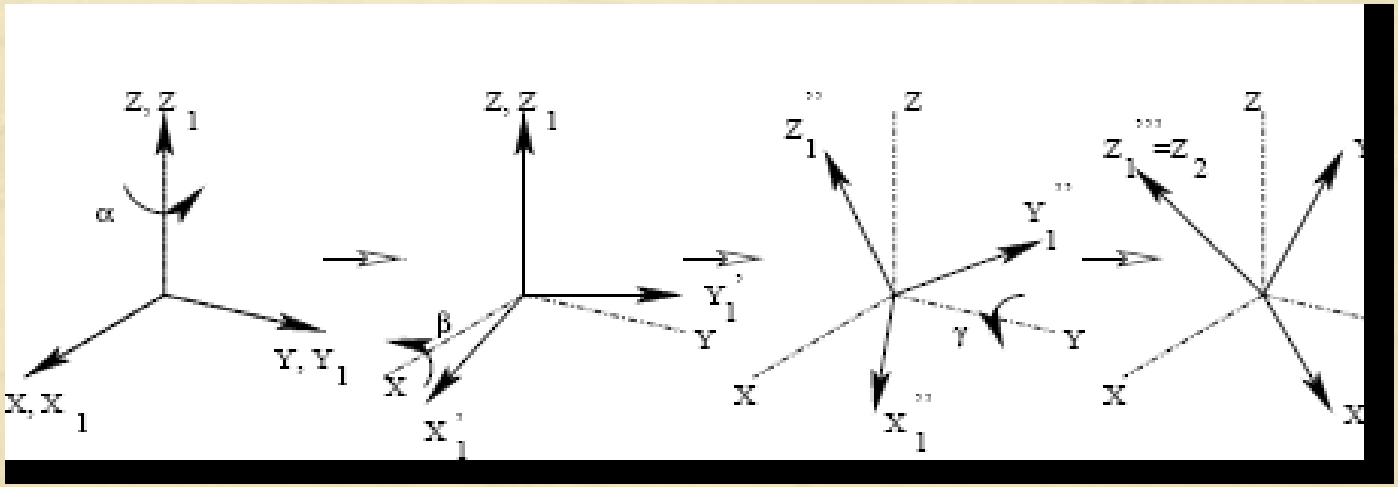

Representation of the Joints

Revolute joint (R)

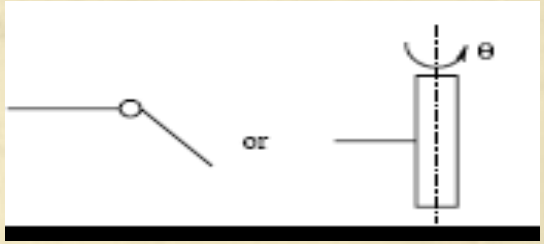

Prismatic joint (P)

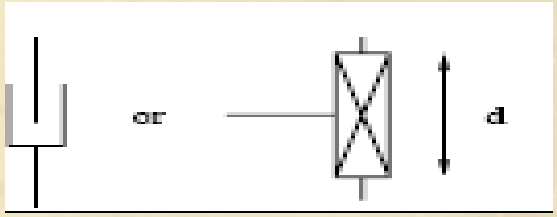

Cylindrical joint (C)

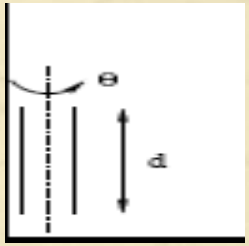

Spherical joint (S$^{|}$)

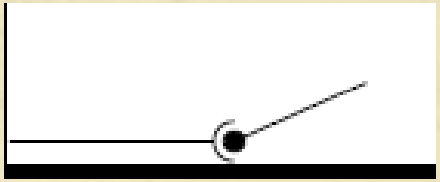

Hooke joint (U)

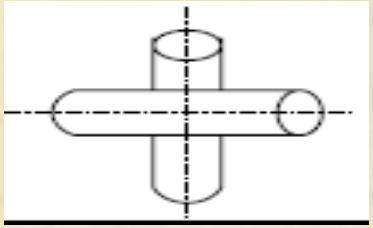

Twisting joint (T)

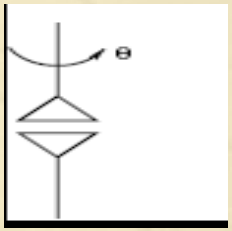

Degrees of Freedom of a System

It is defined as the minimum number of independent parameters / variables / coordinates needed to describe a system completely

Notes

- A point in 2-D: 2 dof; in 3-D space: 3 dof
- A rigid body in 3-D: 6 dof
- Spatial Manipulator: 6 dof
- Planar Manipulator: 3 dof
- Redundant Manipulator

Either a Spatial Manipulator with more than 6 dof
or a Planar Manipulator with more than 3 dof

- Under-actuated Manipulator

Either a Spatial Manipulator with less than 6 dof
or a Planar Manipulator with less than 3 dof

Mobility/dof of Spatial Manipulator

Let us consider a manipulator with n rigid moving links and m joints

C_i: Connectivity of i-th joint; i = 1, 2, 3,……, m

No. of constraints put by i-th joint = 6-Ci

Total no. of constraints = $\sum_{i=1}^{m}(6 - C_i)$

Mobility of the manipulator M = $6n - \sum_{i=1}^{m}(6 - C_i)$

It is known as **Grubler's criterion.**

Mobility/dof of Planar Manipulator

$$M = 3n - \sum_{i=1}^{m}(3 - C_i)$$

Classifications of Robots

- Based on the Type of Tasks Performed

1. Point-to-Point Robots

Examples:

Unimate 2000

T^3

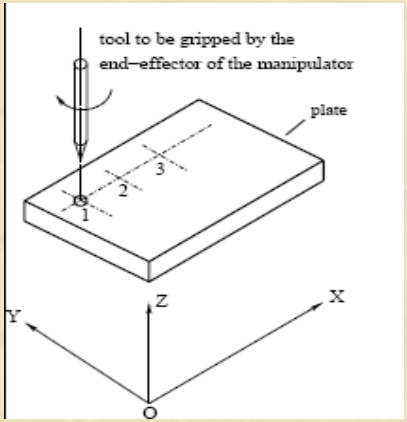

2. Continuous Path Robots

Examples

PUMA

CRS

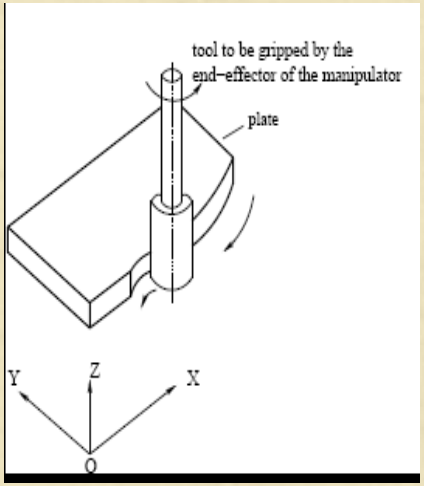

- **Based on the Type of Controllers**

1. **Non-Servo-Controlled Robots**
   - Open-loop control system

   Examples: Seiko PN-100
   - Less accurate and less expensive

2. **Servo-Controlled Robots**
   - Closed-loop control system

   Examples: Unimate 2000
   PUMA
   T3
   - More accurate and more expensive

- **Based on Configuration (coordinate system) of the Robot**

1. **Cartesian Coordinate Robots**

- Linear movement along three different axes
- Have either sliding or prismatic joints, that is, SSS or PPP
- Rigid and accurate
- Suitable for pick and place type of operations
- Examples: IBM's RS-1, Sigma robot

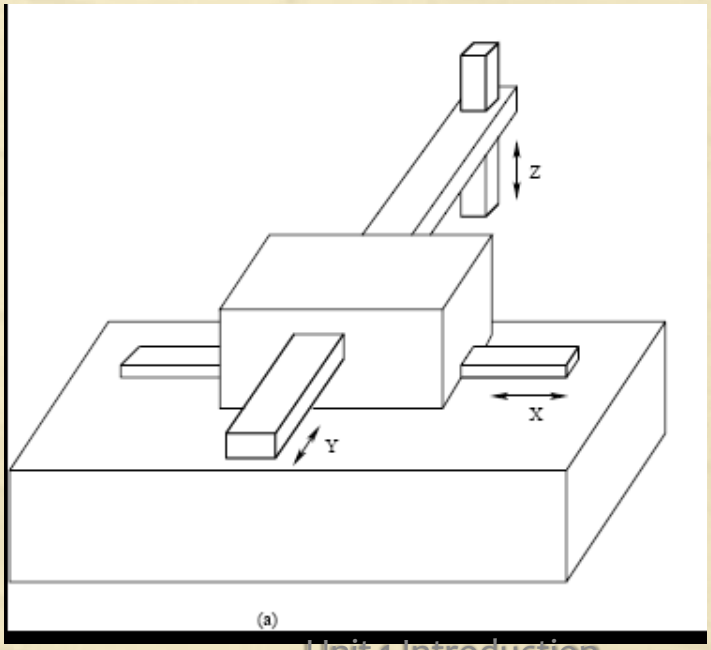

2. Cylindrical Coordinate Robots

- Two linear and one rotary movements
- Represented as TPP, TSS
- Used to handle parts/ objects in manufacturing
- Cannot reach the objects lying on the floor
- Poor dynamic performance
- Examples: Versatran 600

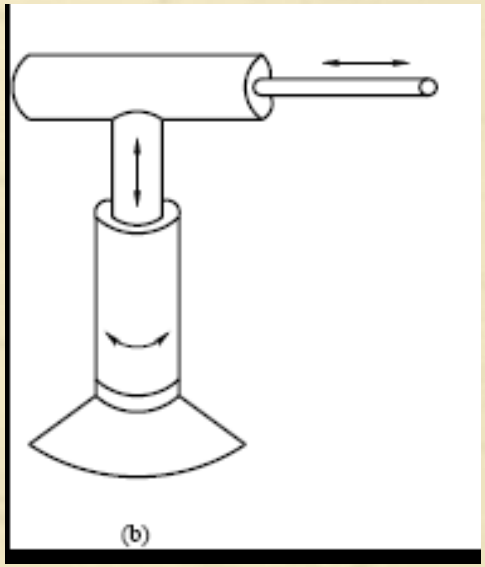

3. Spherical Coordinate or Polar Coordinate Robots

- One linear and two rotary movement
- Represented as TRP, TRS
- Suitable for handling parts/objects in manufacturing
- Can pick up objects lying on the floor
- Poor dynamic performance
- Examples: Unimate 2000B

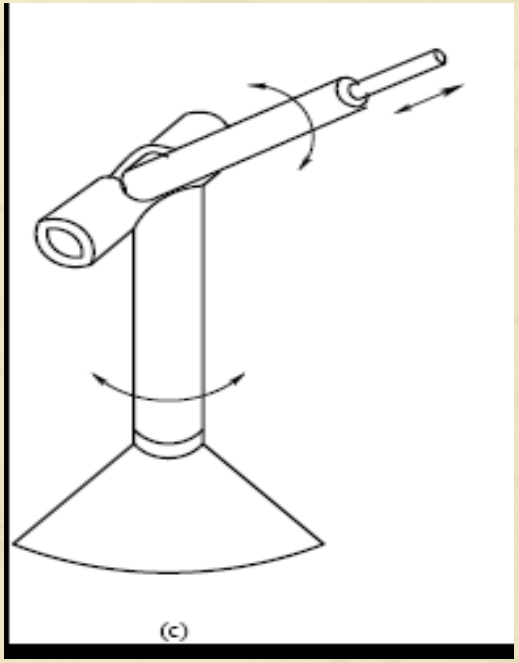

4. Revolute Coordinate or Articulated Coordinate Robots

- Rotary movement about three independent axes
- Represented as TRR
- Suitable for handling parts/components in manufacturing system
- Rigidity and accuracy may not be good enough
- Examples: T^3, PUMA

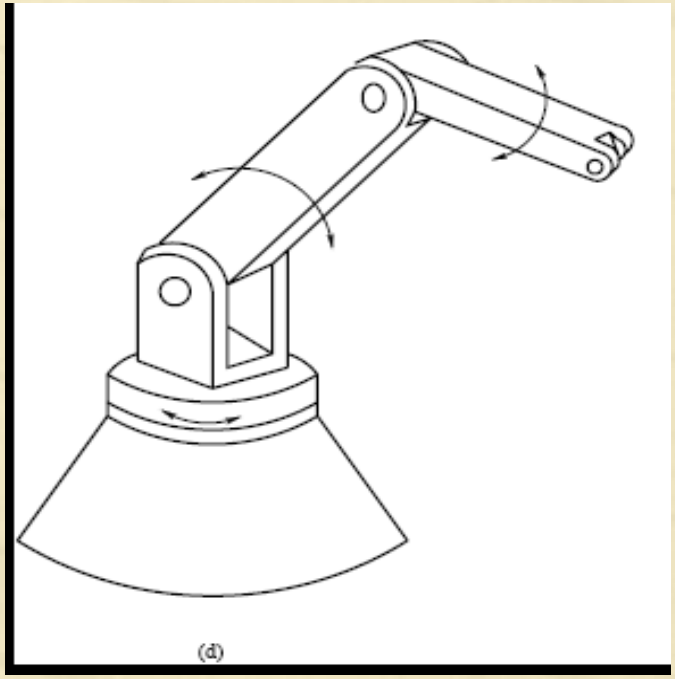

- **Based on Mobility Levels**

1. Robots with fixed base (also known as **manipulators**)

Manipulators

- Serial
  - PUMA, CRS
- Parallel
  - Stewart platform

2. Mobile robots

Mobile robots

- Wheeled robots
- Tracked robots
- Multi-legged robots

Workspace of Manipulators

It is the volume of space that the end-effector of a manipulator can reach

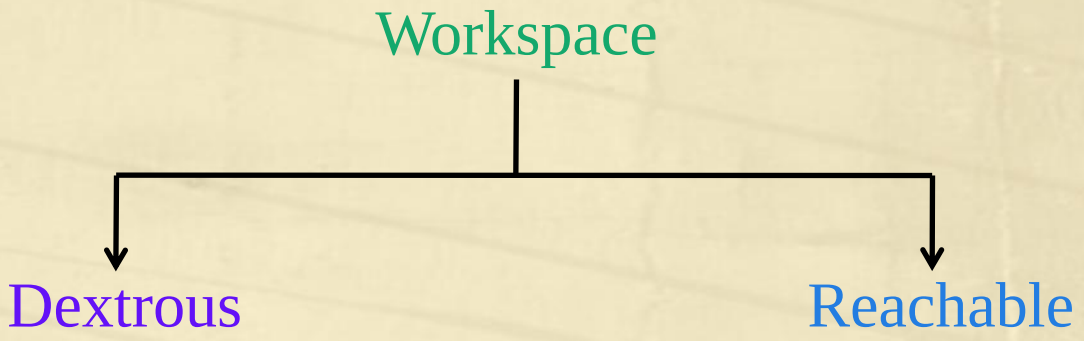

Dextrous Workspace

It is the volume of space, which the robot's end-effector can reach with various orientations

Reachable Workspace

It is the volume of space that the end-effector can reach with a minimum of one orientation

Note

Dextrous workspace is a subset of the reachable workspace

Workspace of Cartesian Coordinate Robot

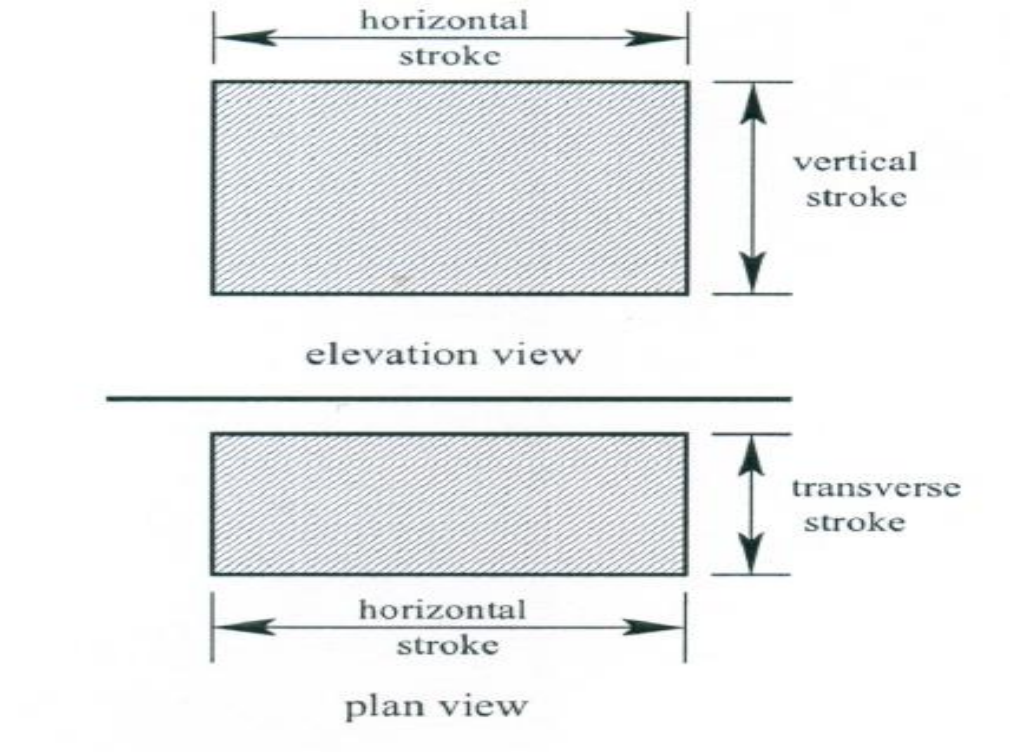

Workspace of Cylindrical Coordinate Robot

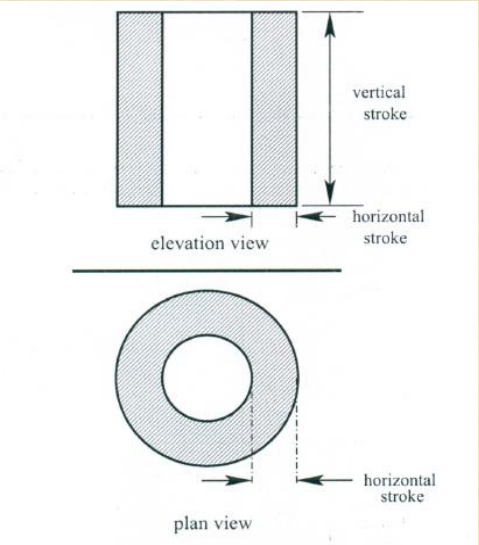

Workspace of Spherical Coordinate Robot

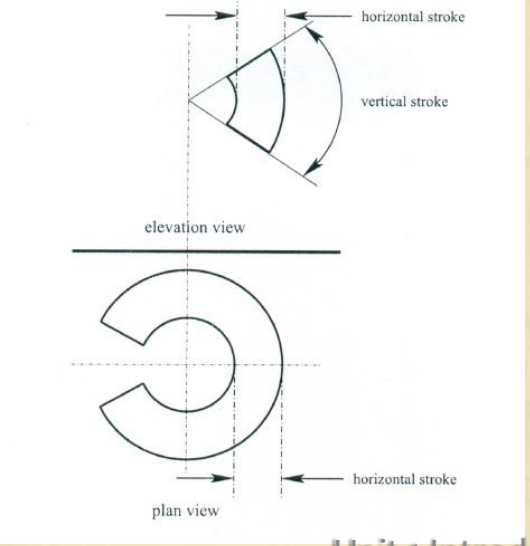

Workspace of Revolute Coordinate Robot

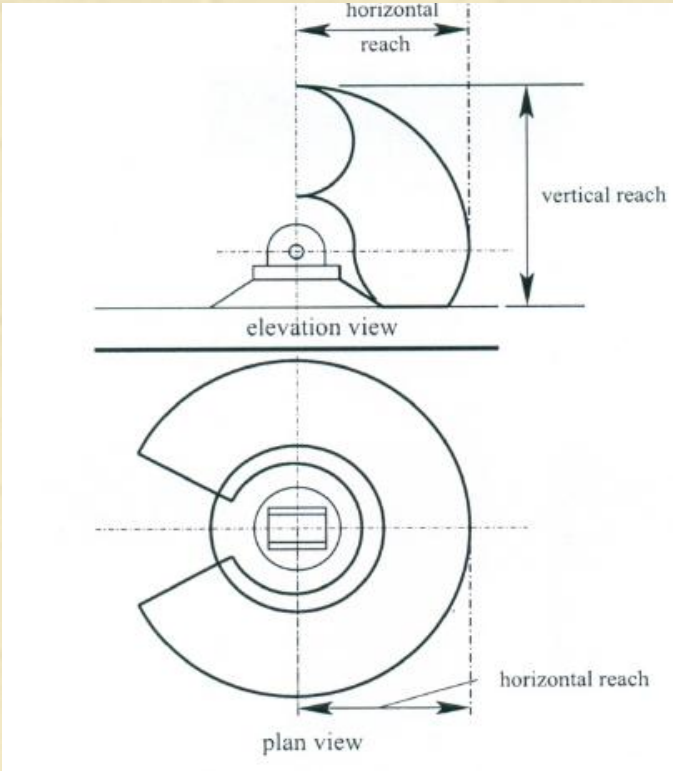

Resolution, Accuracy and Repeatability

Resolution

It is defined as the smallest allowable position increment of a robot

Resolution

Programming resolution

Smallest allowable position increment in robot programme

Basic Resolution Unit

BRU = 0.01 inch/0.1degree

Control resolution

Smallest change in position that the feedback device can measure say 0.36 degrees per pulse

Accuracy (mm)

It is the precision with which a computed point can be reached

Repeatability (mm)

It is defined as the precision with which a robot re-position itself to a previous taught point

Applications of Robots

- **In Manufacturing Units**

Advantages of Robots

1. Robots can work in hazardous and dirty environment
2. Can increase productivity after maintaining improved quality
3. Direct labour cost will be reduced
4. Material cost will be reduced
5. Repetitive tasks can be handled more efficiently

Application Areas

1. Arc Welding
2. Spot Welding
3. Spray Painting
4. Pick and Place Operation
5. Grinding
6. Drilling

- **Under-Water Applications**

Purposes

1. To explore various resources
2. To study under-water environment
3. To carry out drilling, pipe-line survey, inspection and repair of ships

Notes

•Robots are developed in the form of ROV (Remotely Operated Vehicle) and AUV (Autonomous Under-water Vehicle)

•Robots are equipped with navigational sensors, propellers/ thrusters, on-board softwares, and others

- **Medical Applications**

1. Telesurgery
2. Micro-capsule multi-legged robots
3. Prosthetic devices

- **Space Applications**

1. For carrying out on-orbit services, assembly job and interplanetary missions
2. Spacecraft deployment and retrieval, survey of outside space shuttle; assembly, testing, maintenance of space stations; transport of astronauts to various locations
3. Robo-nauts
4. Free-flying robots
5. Planetary exploration rovers

- **In Agriculture**

1.For Spraying pesticides
2.For spraying fertilizers in liquid form
3. Cleaning weeds
4.Sowing seeds
5.Inspection of plants

- **Some other Applications**

1. Replacement of maid servant
2.Underground coal mining
3.Garbage Collection
4.Sewage line cleaning
5.Fire Fighting etc.

Robot End-Effectors

An end-effector is a device attached to the wrist of a manipulator for the purpose of holding materials, parts, tools to perform a specific task

End-Effectors

Grippers

End-effectors used to grasp and hold objects

Tools

End-effectors designed to perform some specific tasks
Ex: Spot welding electrode, spray gun

Classification of Grippers

1. **Single** gripper and **double** gripper

   Single gripper: Only one gripping device is mounted on the wrist

   Double gripper: Two independent gripping devices are attached to the wrist

   Example: Two separate grippers mounted on the wrist for loading and unloading applications

2. **Internal** gripper vs. **External** gripper

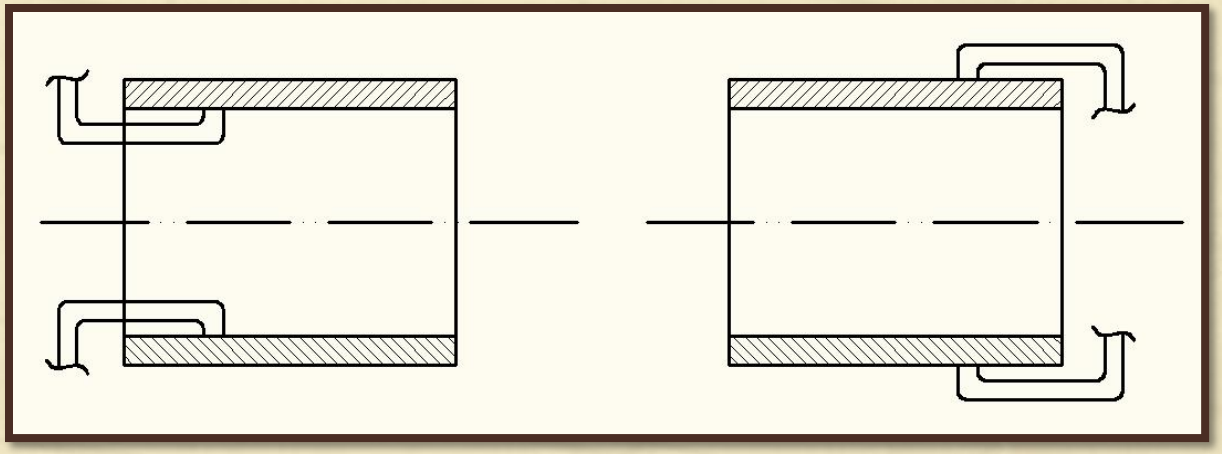

Internal gripper External gripper

3. **Soft** gripper vs. **Hard** gripper

Hard gripper: Point contact between the finger and object

Soft gripper: Area (surface) contact between the finger and object

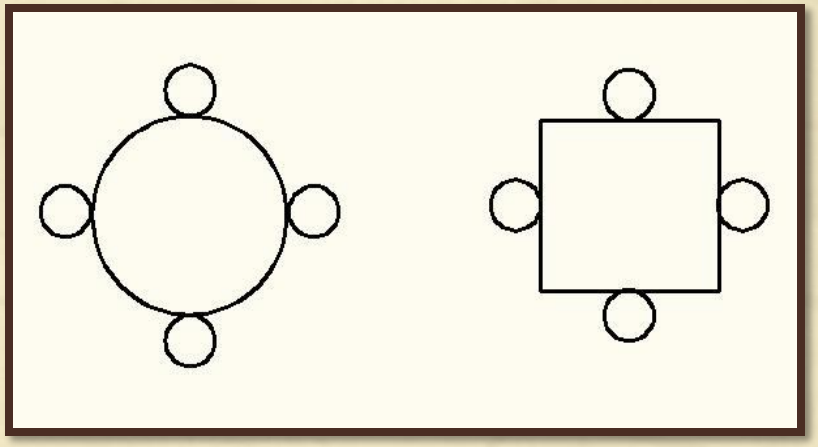

4. **Active** gripper vs. **Passive** gripper

Active gripper: Gripper with sensor(s)

Passive gripper: Gripper without sensor(s)

Ex: Remote Center Compliance (RCC)

A Few Robot Grippers

1. Mechanical Grippers

- Use mechanical fingers (jaws) actuated by some mechanisms
- Less versatile, less flexible and less costly

Examples

(i) Gripper with linkage actuation

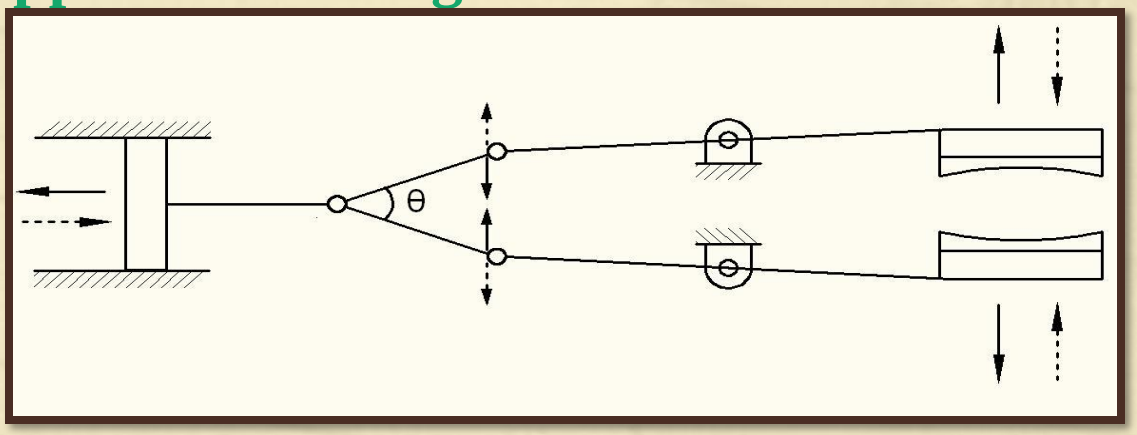

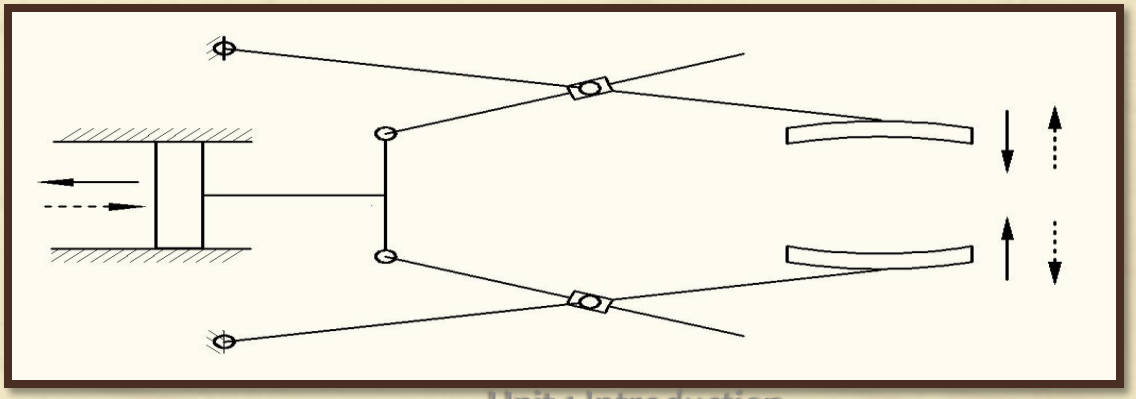

(ii) Gripper with rotary actuation

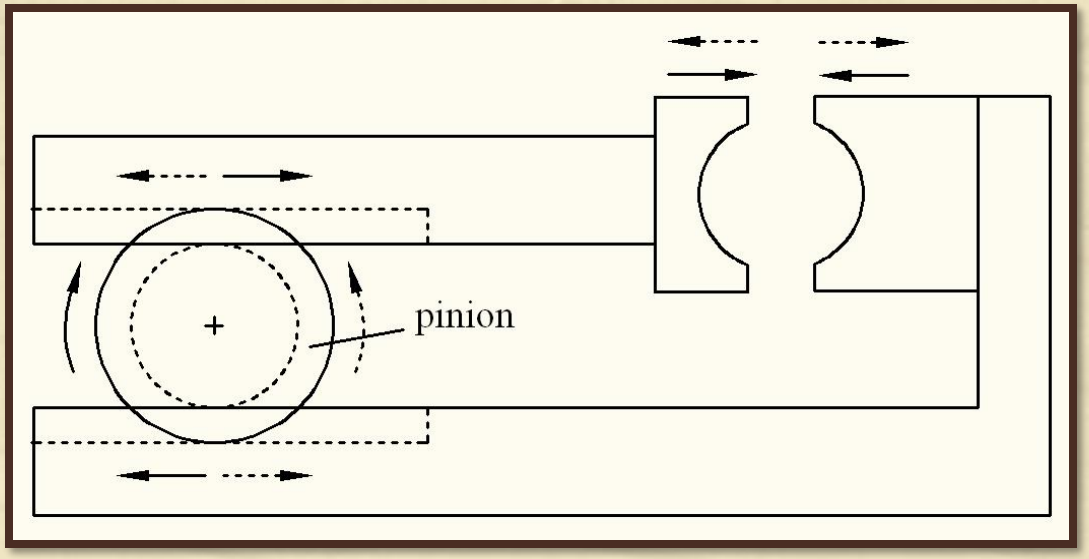

Rack Pinion Mechanism

- When Pinion rotated in clockwise direction the upper part will move towards the gripping pad
- Reverse will release the
- object

(iii) Gripper with screw actuation

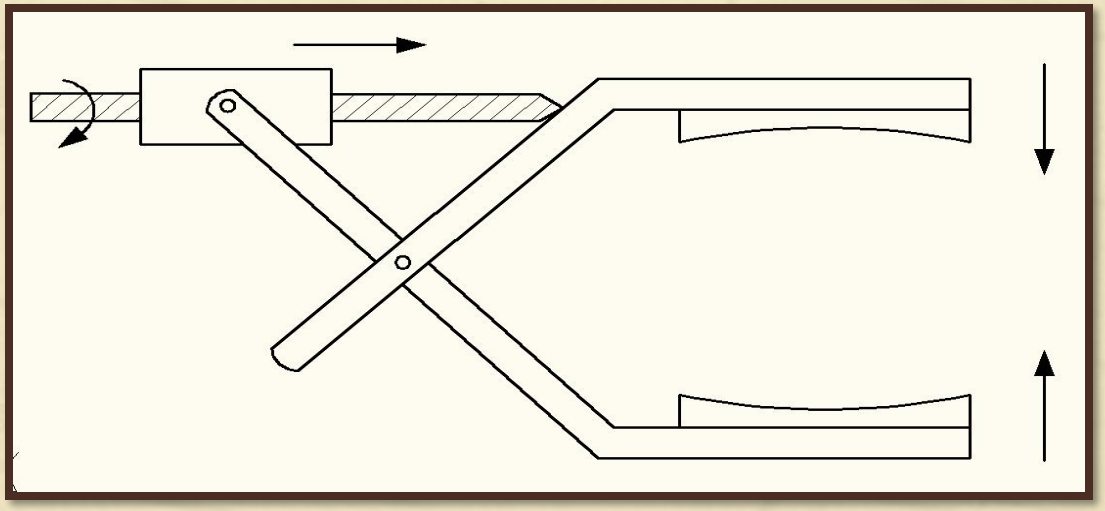

(iv) Gripper with cam actuation Cam-Followers Mechanism

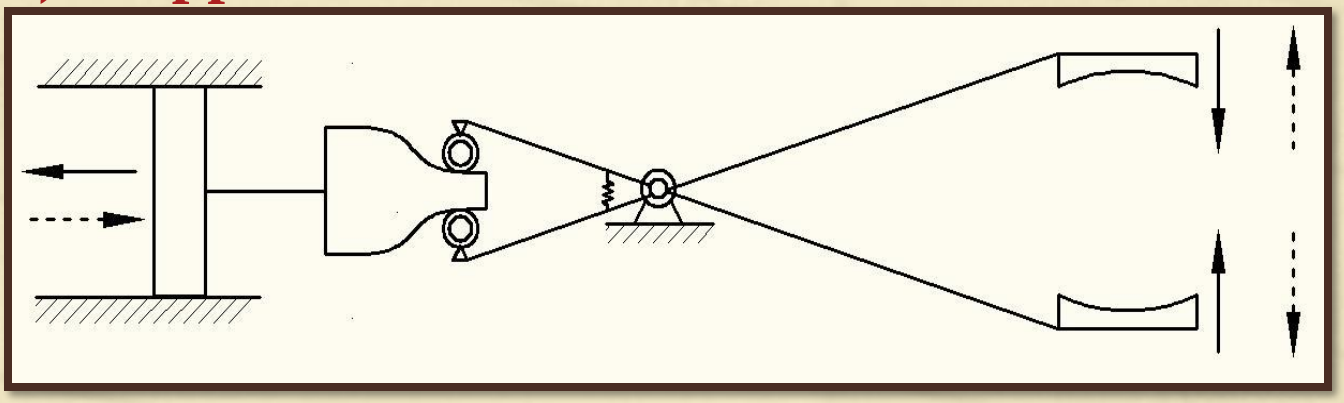

2. Vacuum Gripper (used for thin parts)

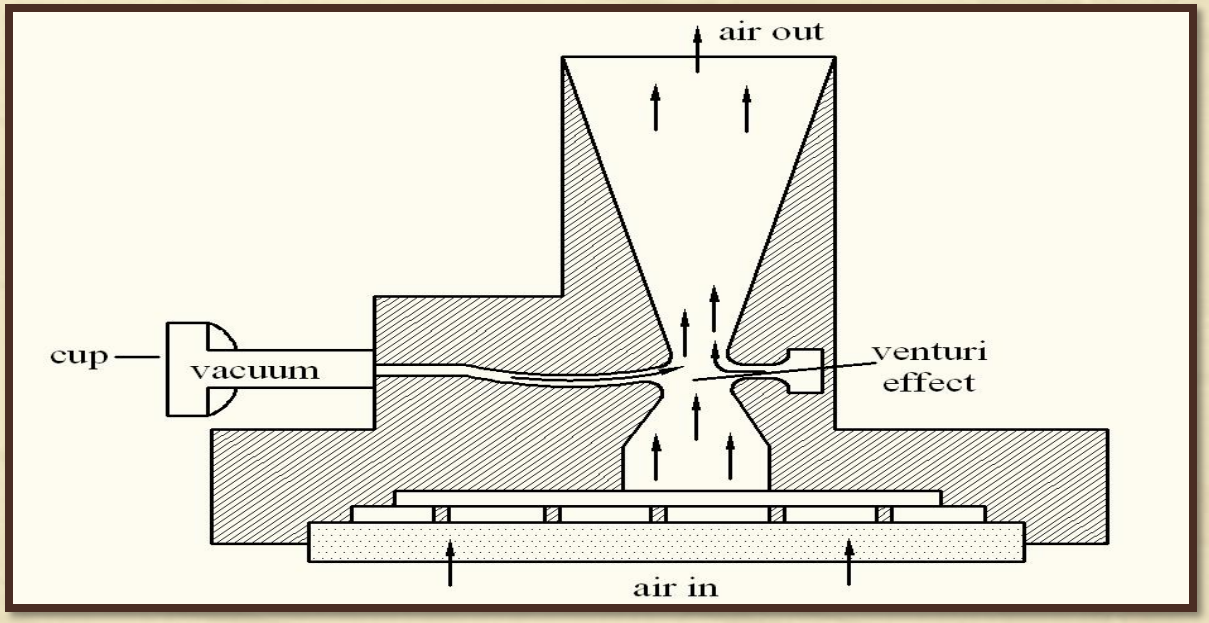

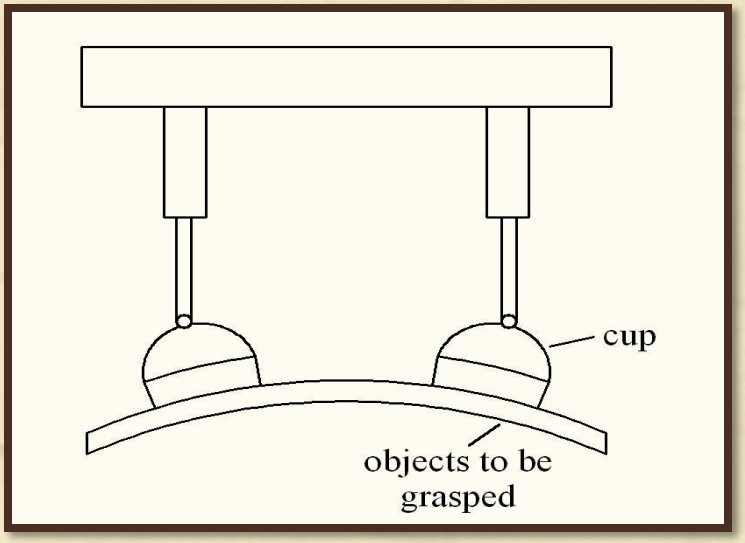

- Suction cup is made of elastic material like rubber or soft plastic
- When the object to be handled is soft, the cup should be made of hard substance
- Two devices can be used: Either Vacuum pump or venturi

3. **Magnetic Gripper** (for magnetic materials only. For example: various steels but not stainless steel)

- Can use either electro-magnets or permanent magnets
- Pick up time is less
- Can grip parts of various sizes
- Disadvantage: residual magnetism
- Stripping device: for separating the part from the permanent magnet
- For separating the part from electro-magnet, reverse the polarity

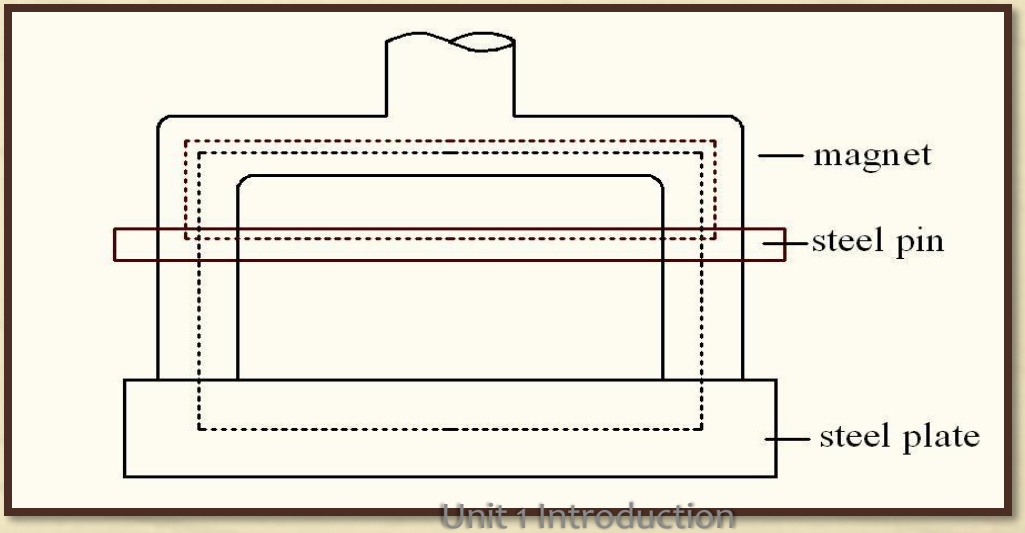

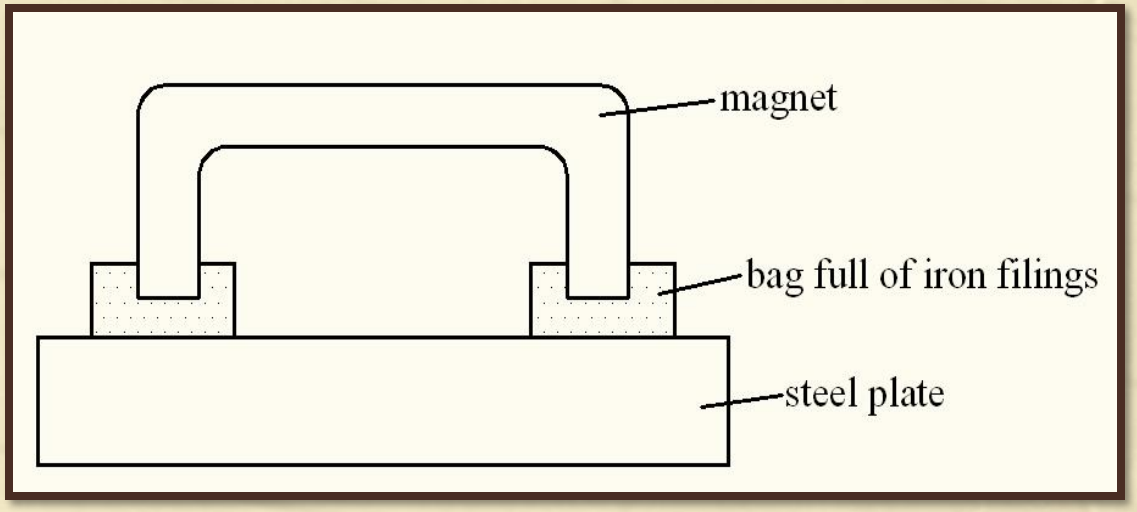

4. Adhesive Gripper

•Grasping action using adhesive substance

•To handle lightweight materials

5. Universal Gripper

Example: Human gripper

Passive Gripper

Task: To insert a peg into a hole

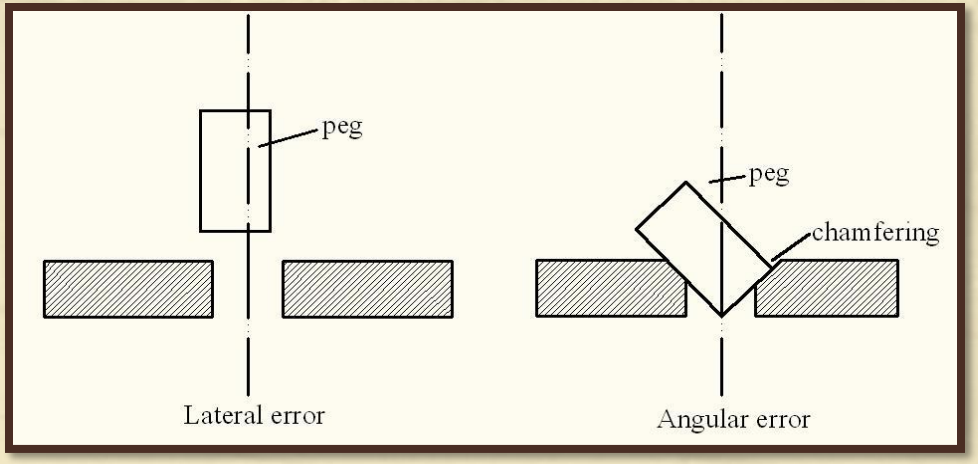

Solution: Use Remote Center Compliance (RCC)

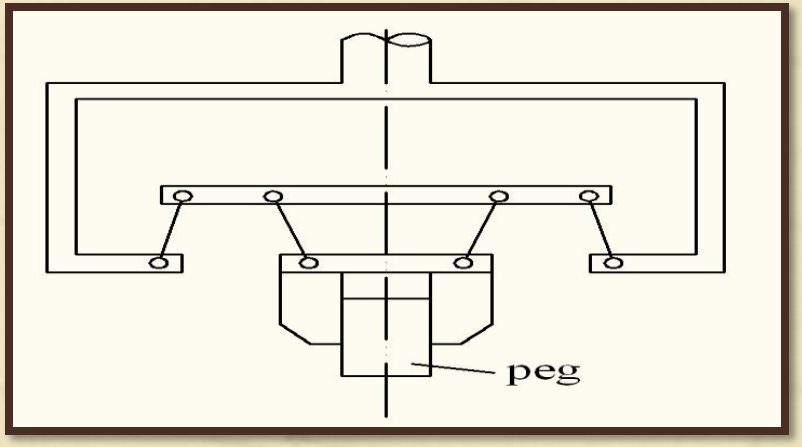

RCC is inappropriate for assembly of pegs in horizontal direction

Insertion angle must be less than 45 degrees

Cannot be used in chamferless insertion tasks

Robot Teaching

To provide instructions to the robots

Robot Teaching

Online

While Teaching we will use robots

1. Manual Teaching (Point to Point Task)
   - Controls handle/ Joysticks
   - Push buttons
   - Teach Pendant(Remote)
2. Lead through Teaching (Continuous Task)
   - Robot Simulator

Offline

While teaching not use robots

Eg. Programming languages

Specification of a Robot

- Control type
- Drive system
- Coordinate system
- Teaching/Programming methods
- Accuracy, Repeatability, Resolution
- Pay-load capacity
- Weight of the manipulator
- Applications
- Range and speed of arms and wrist
- Sensors used
- End-effector/ gripper used

Economic Analysis

Let F: Capital investment to purchase a robot which includes its purchasing cost and installation cost

B: Savings in terms of material and labour cost

C: Operating and maintenance cost

D: Depreciation of the robot

A: Net savings

$$A = B - C - D$$

G: Tax to be paid on the net savings

Pay-back period E = (Capital investment, F)/ (B-C-G)

Let I: Modified net savings after the payment of tax

Rate of return on investment

H= (I/F)*100%

A company decides to purchase the robot, if

pay-back period < techno-economic life

rate of return on investment > rate of bank interest